875xxx Shifter

Shifter series 875xxx, (twist grip)
Up to 6 gears and F-N -R

Selection table

Part no:		Description
875203	–	Shifter 3 speed F-N-R
875303	–	Shifter 4 speed F-N-R
875420	–	Shifter 3 speed Reverse and 6 speed Forward
–	–	–
–	–	Other versions available on request

Dimensions

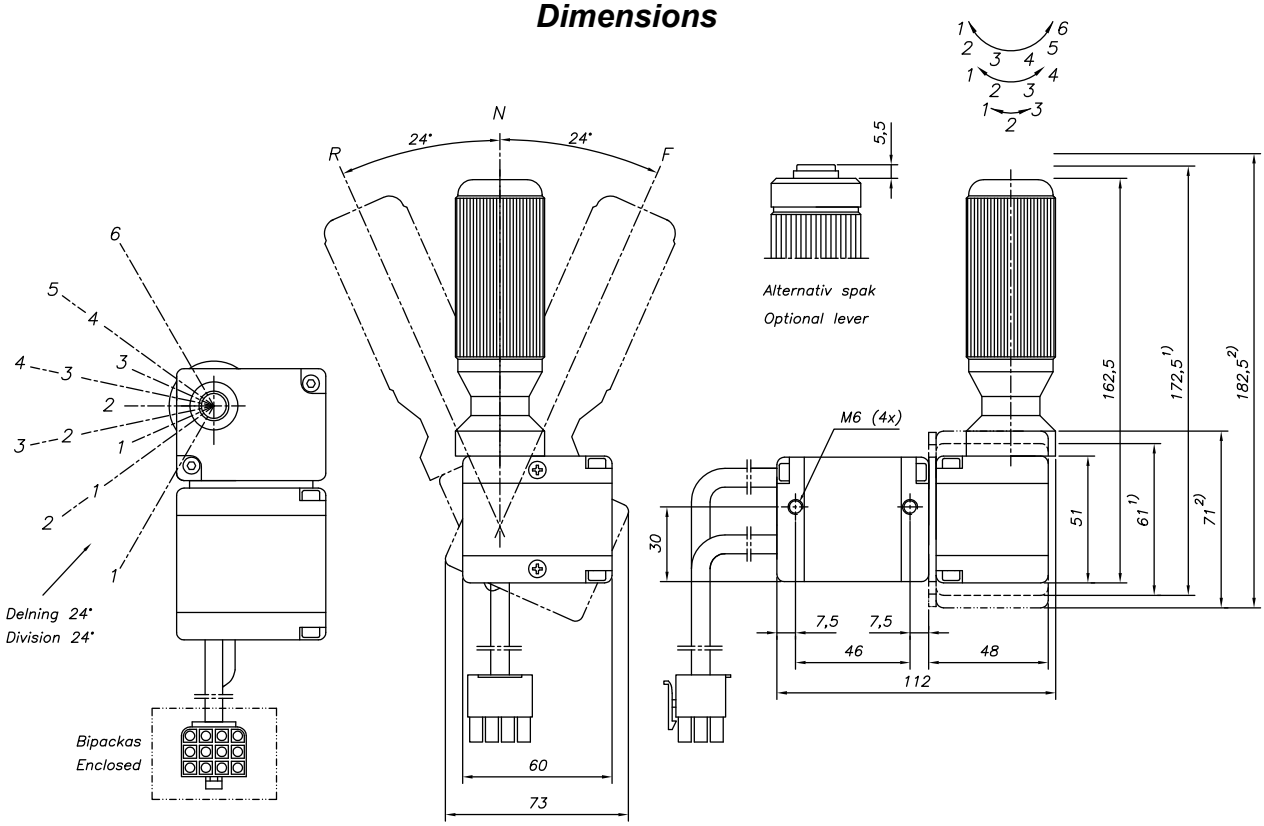

Housing: aluminium, anodized. Cover plate: coated steel.
Bearings: brass, and hardened steel. Handle: POM.
Type of activator: mechanical microswitches
Weight: 1600-1900g, (depending on variant)